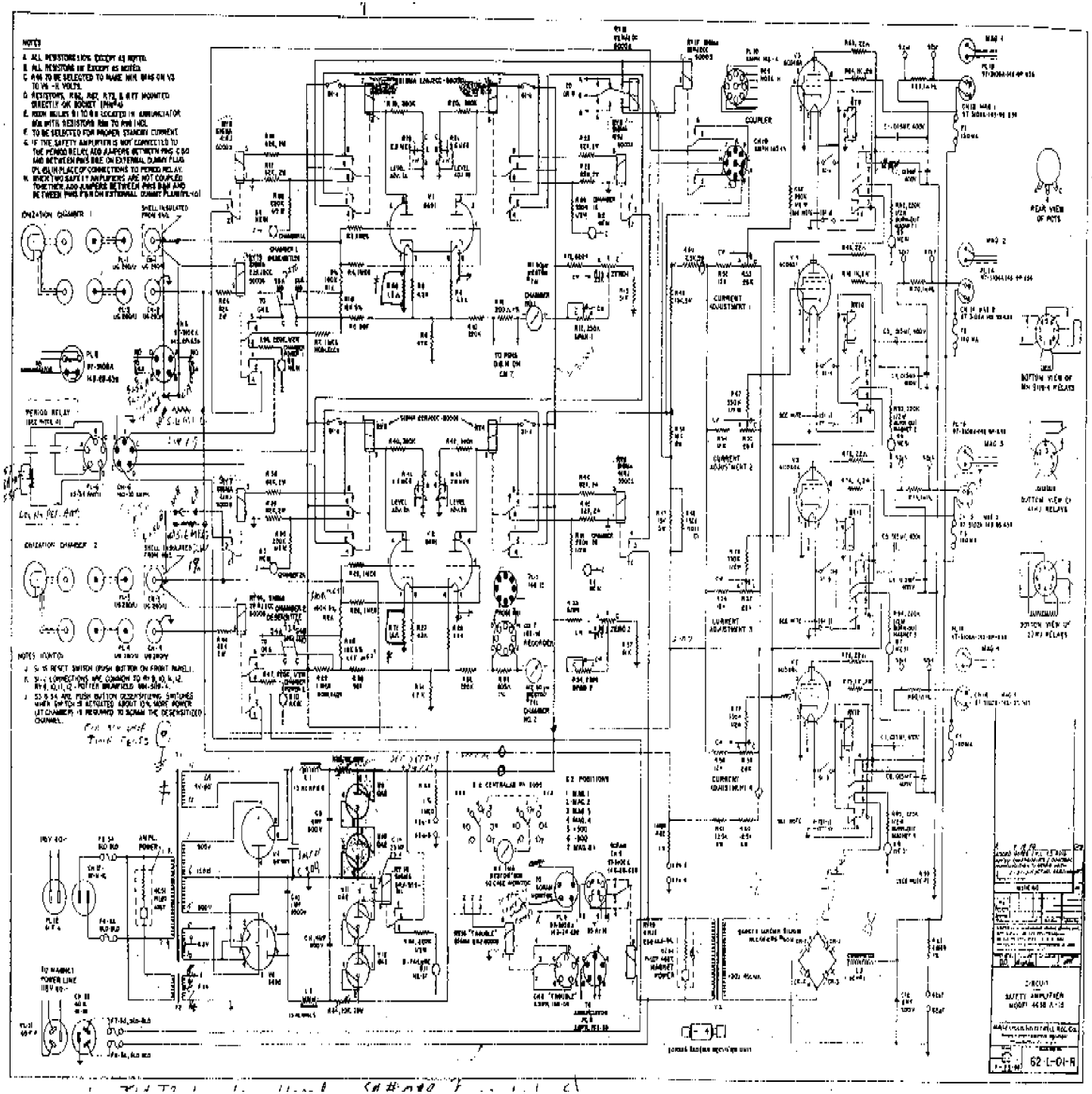
NOTES
A. ALL RESISTORS 10% EXCEPT AS NOTED.
B. ALL RESISTORS 1% EXCEPT AS NOTED.
C. R46 TO BE SELECTED TO MAKE MIN. 0.45 ON V3 TO V6 - H. VOLTS.
D. RESISTORS, R62, R67, R73, & R77 MOUNTED DIRECTLY ON SOCKET (PIN #4)
E. RIGHT RELAYS 81 TO 88 LOCATED IN ANNUNCIATOR BOX WITH RESISTORS R88 TO R98 (HC).
F. TO BE SELECTED FOR PROPER STANDBY CURRENT.
G. IF THE SAFETY AMPLIFIER IS NOT CONNECTED TO THE PERIOD RELAY, ADD JUMPERS BETWEEN PINS C & D AND BETWEEN PINS B&E ON EXTERNAL DUMMY PLUG (PL-8) IN PLACE OF CONNECTIONS TO PERIOD RELAY.
H. WHEN TWO SAFETY AMPLIFIERS ARE NOT COUPLED TOGETHER ADD JUMPERS BETWEEN PINS B&H AND BETWEEN PINS F&N ON EXTERNAL DUMMY PLUG (PL-10)
IONIZATION CHAMBER 1
SHELL INSULATED FROM GND.
PERIOD RELAY
IONIZATION CHAMBER 2
NOTES (CONT'D)
J. S1 IS RESET SWITCH (PUSH BUTTON ON FRONT PANEL).
K. S1-2 CONNECTIONS ARE COMMON TO R1-8, 10, 11, 12. R1-8, 10, 11, 12 - POTTER BRUNFIELD MM-509-4.
J. S3 & S4 ARE PUSH BUTTON DESENSITIZING SWITCHES WHEN SWITCH IS ACTUATED ABOUT 15% MORE POWER LAT CHAMBER IS REQUIRED TO SCRAM THE DESENSITIZED CHANNEL.
COUPLER
CURRENT ADJUSTMENT 1
CURRENT ADJUSTMENT 2
CURRENT ADJUSTMENT 3
CURRENT ADJUSTMENT 4
REAR VIEW OF POTS
BOTTOM VIEW OF MM 5119-4 RELAYS
BOTTOM VIEW OF 4141 RELAYS
BOTTOM VIEW OF 2141 RELAYS
RECORDER
CHAMBER NO. 2
CHAMBER NO. 1
CHAMBER NO. 2
AMPL. POWER
TO MAGNET POWER LINE
MAGNET POWER
CIRCUIT
SAFETY AMPLIFIER
MODEL 4638 A-15
62-L-01-R